Airlight
THINKING AHEAD

Military Standard

Addressable Intelligent Single Input Module

Model No - AU101SIM/D

Overview:

This Addressable Intelligent Single input module is designed to meet the supervisory requirements of fire protection systems. This device utilizes monitoring circuits to examine the contact status of the connected water flow switch/pressure switch, building automation and for security applications.

- Soft addressing
- Blinking LED for Visual Supervision
- Electrical Supervision
- Powered by signaling line circuit
- Address can be viewed and changed from the panel
- Transient Protection upto 2.4KV

Specification

Electrical Specifications

Operating voltage	17-24V DC
Quiescent current	600 µA(max)
Alarm current	1 mA(max)
End of Line Resistance	10K Ohms
Maximum IDC Resistance	100 Ohms
Maximum IDC Current	600 µA
Altitude	3000m(above MSL)

Indications

Normal	Green LED (Blinks during scan)
Alarm	Red LED (Glows steady)

General Specifications

Operating temperature	-10ºC to 55ºC
Storage temperature	5ºC to 40ºC
Humidity	0-95% RH (Non-condensing)
Color	White
Compatibility	AUAA2X Protocol

Complied with:

MIL-461E

Tested & Certified by **NABL - INDIA**

Mechanical Specifications

Dimensions(HxWxD) 106x108x38mm

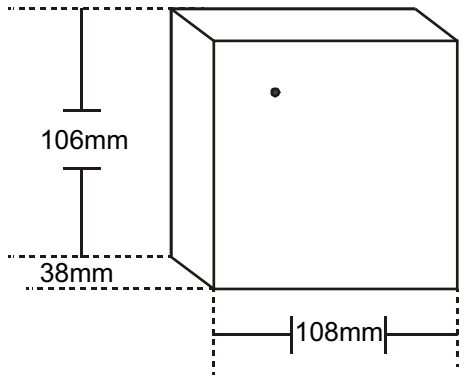

DATASHEET